Radial fan FKL (B, P) -1, -3

Model

Radial fan FKL

The FKL radial fan is an industrial and ventilation fan that works with a high degree of efficiency.

These are fans for direct drive or belt-drive and are available with two different types of impellers depending on application. The B impeller has blades that are backwards bent and the P impeller has flat backwards bent blades.

Facts

The FML radial fan with a B impeller is intended for clean air (clean gases).

Flow range:	1–30 m^3/s
Pressure range:	100–3,000 Pa
Efficiency up to:	86.5%

The FML radial fan with a P impeller is intended for both clean air and air (gas) with lower dust content.

Flow range:	2–25 m^3/s
Pressure range:	100–2,000 Pa
Efficiency up to:	76%

Design

The fan is square-shaped and is mounted on a base making the fan easy to locate in the installation. The fan is manufactured with the required blow-off form.

The fan housing is primarily manufactured in Aluzinc sheet metal, whilee the impeller, which has an all-welded design, is normally delivered lacquered in environmental class C2.

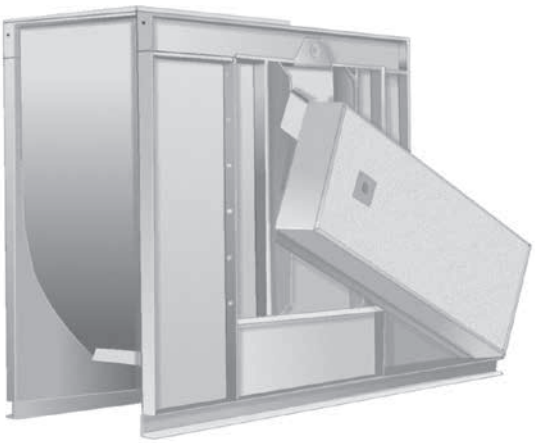

Åkerstedts Verkstads AB, Broholm 1, SE-535 91 Kvänum, Sweden. Tel: +46 (0)512 – 325 60. **www.akerstedts.com**

åkerstedts
industrial fans since 1977

Radial fan FKL – Specifications

Item No./Fan code =	FKL	-	X	-	A	-	BBB	-	C	-	D
Impeller											
Bent backwards, B			B								
Flat bent backwards, P			P								
Drive type											
Direct-driven					1						
Belt-driven					3						
Size											
089							089				
090							090				
091							091				
100							100				
101							101				
112							112				
125							125				
132							132				
140							140				
141							141				
Blow-off form											
H1									1		
H2									2		
H3									3		
H4									4		
V1									5		
V2									6		
V3									7		
V4									8		
Drive type direct drive											
132 = Ø 38											1
160 = Ø42											2
180 = Ø48											3
200 = Ø55											4
225 = Ø60											5
250 = Ø65											6
280 = Ø75											7
315 = Ø80											8
Drive type belt-drive											
Motor max. M180, on foundation											2
Motor 200–225, on base											3
Motor 250–280, on base											4

B impeller

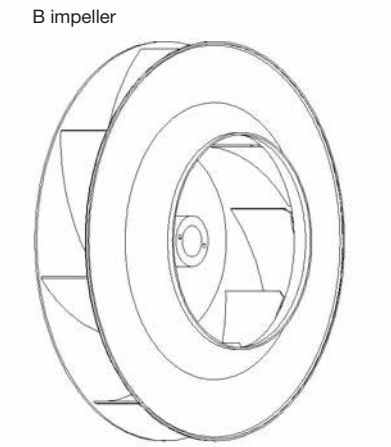

Backwards bent blades.
For transport of clean gases.

P impeller

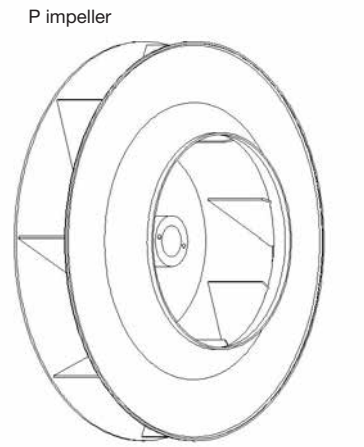

Flat, backwards bent blades.
For transport of clean gases or gases with low level of dust content.

Exploded view FKL

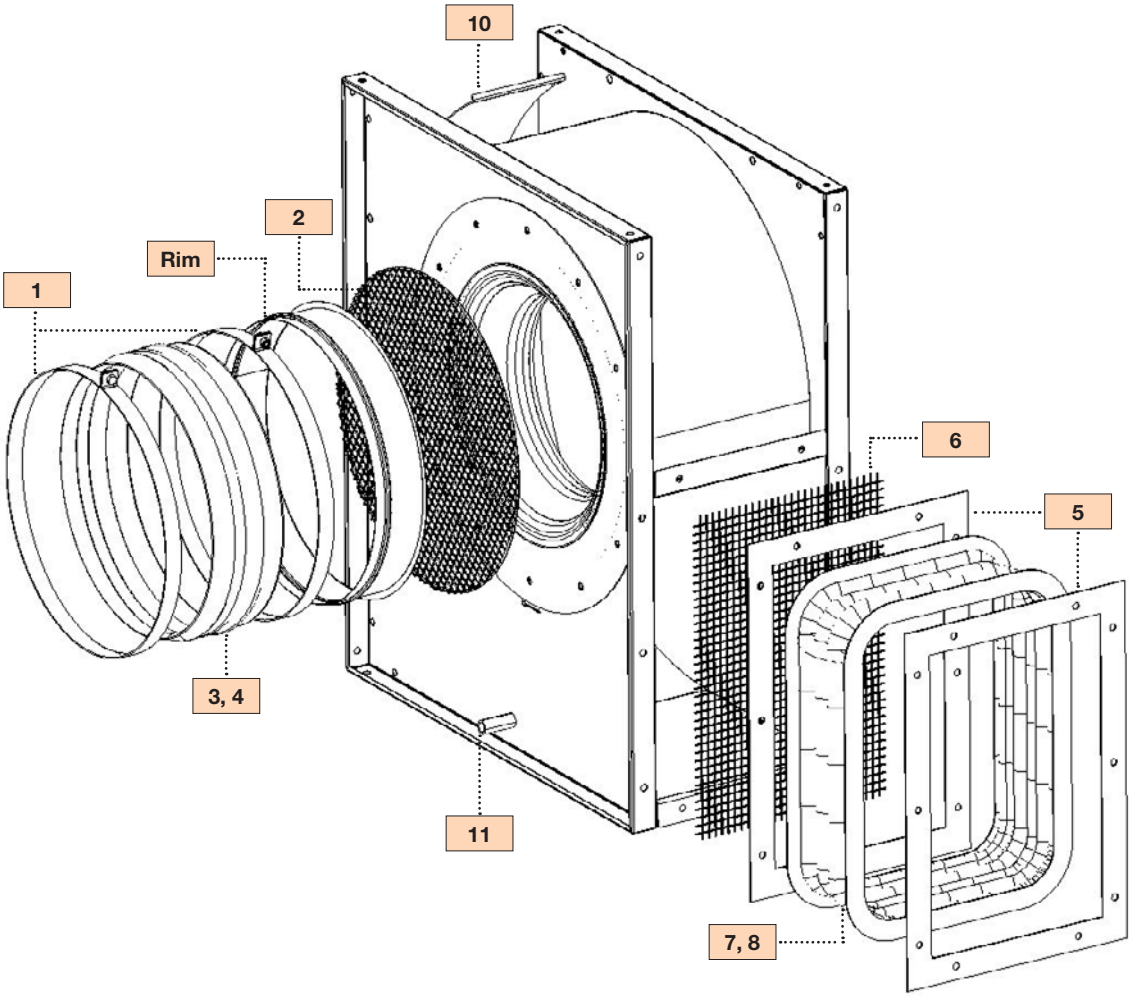

Optional accessories

Item numbers for FKL exploded view, Accessories

No.	Designation	Item No.	Comment
1	Clamping band	KBAA1aaa	
2	Inlet guard Inlet FKL	GOBA1aaa	
3	Plastic fabric sleeve coupling FKL, inlet L = 150	POBA1aaa	Tmax: +80°C
4	Flue gas sleeve coupling FKL, inlet L = 150	AOBA1aaa	Tmax: +350°C, Al clad fibreglass sleeve coupling
5	Flange outlet FKL	FREA1aaa	
6	Prootective guard, Outlet FKL	GRBA1aaa	
7	Sleeve coupling FKL, outlet L = 120 flange	SREA1aaa	Tmax: +80°C, Drawn with flange on sketch, to be changed
8	Sleeve coupling, Outlet FKL L = 120 flange	AREA1aaa	Tmax: +350°C, Al clad fibreglass sleeve coupling
9	Transition piece, Outlet FKLaaa-Øbbb nipple	TREA1aaaDbbb	aaa - fan size, bbb - diameter mm
10	Inspection cover	FXLZ1aaa11	
11	Drainage, internal thread R15 L = 34	FXLZ1aaa12	
12	Motor rain cover	FXLZ1aaa13	

Item number for FKL, Painting

No.	Designation	Item No.	Comment
1	Set-up cost painting FKL M2 (C2)	FKLZ1811	Only used with Customer-specific colour
2	Set-up cost painting FKL M3/Epoxy C4	FKLZ1812	
4	Radial fan painting Customer-specific Colour	FKLZ1aaa913	Specify RAL colour code when ordering.

Blow-off forms

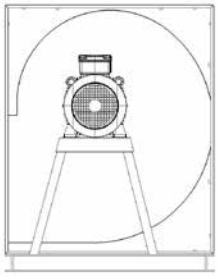

H1

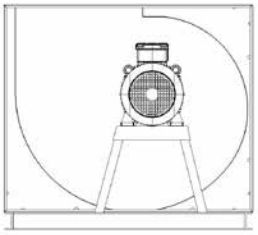

H2

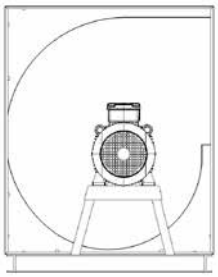

H3

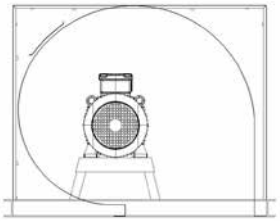

H4 for FKL 090 to 101

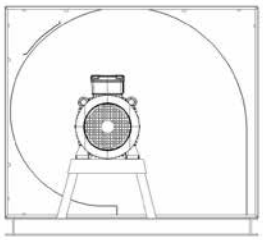

H4 for FKL 112 to 141

Inspection cover FXLZ-1-aaa-11 (option)

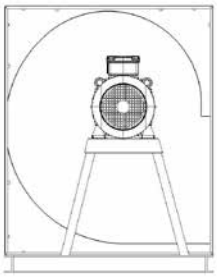

V1

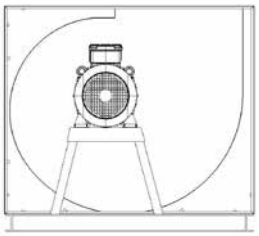

V2

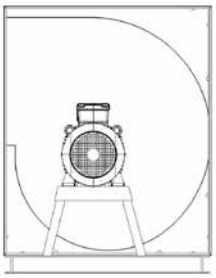

V3

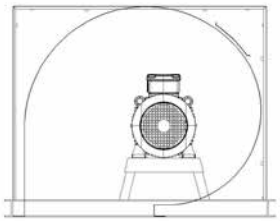

V4 for FKL 090 to 101

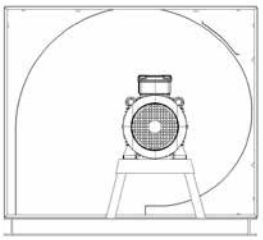

V4 for FKL 112 to 141

Fan seen from the operating side. Location of any inspection cover is shown in the figure above.

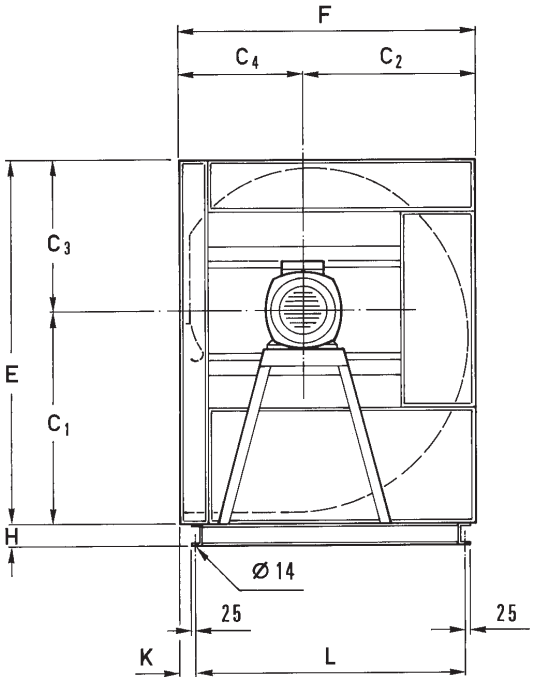

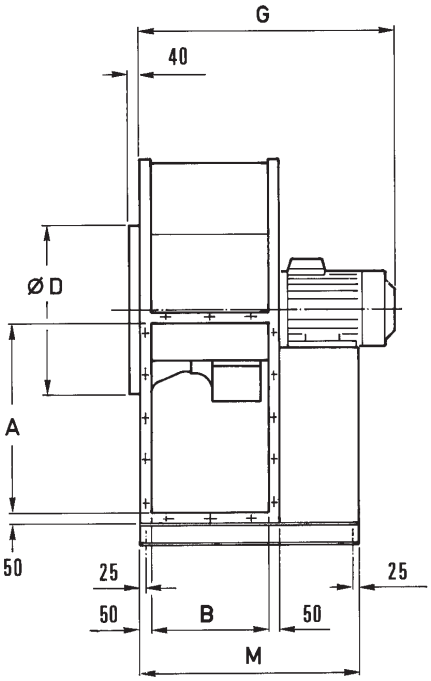

Dimensions

FKL (B,P) 1	A	B	C_1	C_2	C_3	C_4	D	E	F	G	H	L H1 H2 H3	L H4	M	Max. Motor	Max. Weight [kg] excluding motor
089/090/091	900	560	1,018	814	702	597	800	1720	1,411	1,240	100	1,286	1,771	1,026	180L	275
100/101	1,000	630	1,125	902	777	658	900	1,902	1,560	1,420	100	1,435	1,953	1,177	225S	335
112	1,120	710	1,254	1,008	864	731	1,000	2,118	1,739	1,600	120	1,614	2,043	1,340	225M	420
125	1,250	800	1,394	1,123	967	810	1,120	2,361	1,933	1,600	120	1,808	2,286	1,430	225M	550
132	1,320	850	1,470	1,184	1,030	853	1,250	2,500	2,037	1,820	150	1,912	2,425	1,535	280S/M	625
140/141	1,400	900	1,555	1,255	1,078	901	1,250	2,633	2,156	1,850	150	2,031	2,558	1,660	315S	720

Blow-off forms

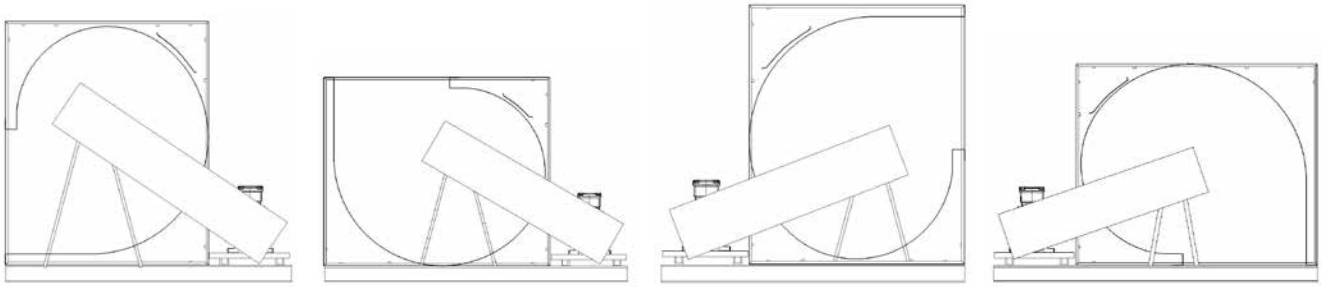

H1 *H2* *H3* *H4*

Inspection cover FXLZ-1-aaa-11 (option)

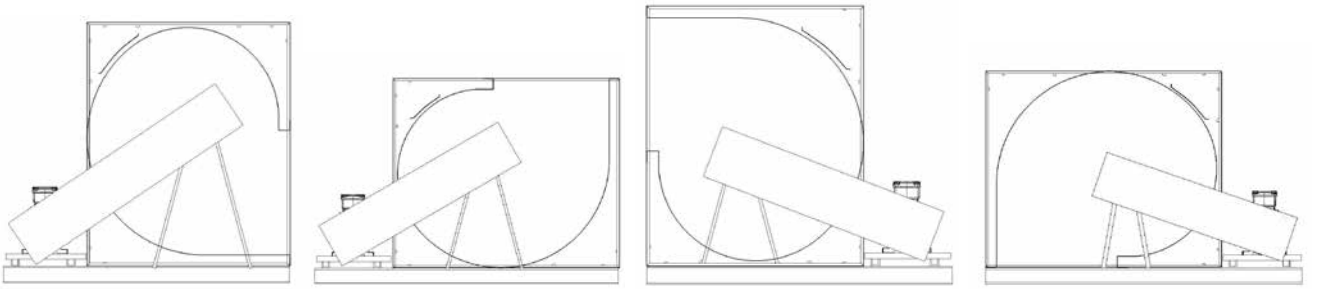

V1 *V2* *V3* *V4*

Fan seen from the operating side. Location of any inspection cover is shown in the figure above.

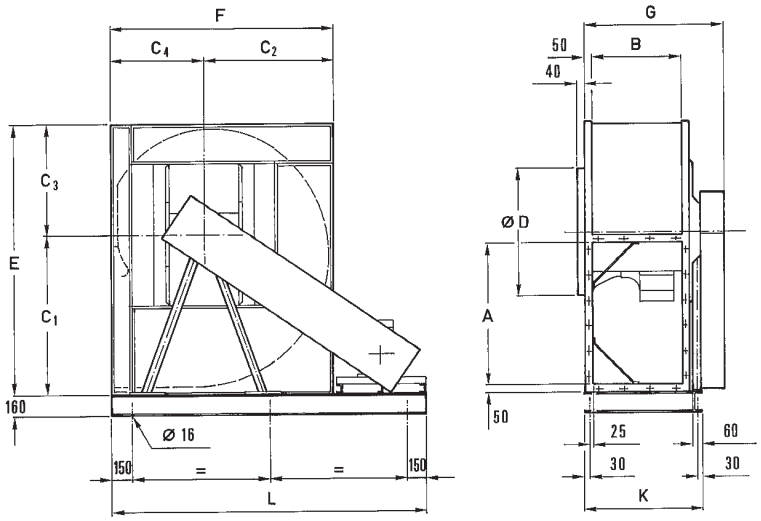

Dimensions

FKL (B,P) 3	A	B	C_1	C_2	C_3	C_4	D	E	F	G_{max}	K	L <180 H1 H3	L H2 H4	L M200–225 H1 H3	L H2 H4	L M250–280 H1 H3	L H2 H4	d*
090	900	560	1,018	814	702	597	800	1720	1,411	930	660	2,131	2,440	2,175	2,484			40
100	1,000	630	1,125	902	777	658	900	1,902	1,560	1,000	730	2,280	2,622	2,324	2,666			50
112	1,120	710	1,254	1,008	864	731	1,000	2,118	1,739	1,130	885	2,459	2,838	2,503	2,882	2,774	3,153	55
125	1,250	800	1,394	1,123	967	810	1,120	2,361	1,933	1,220	975	2,653	3,081	2,697	3,125	2,968	3,396	60
140	1,400	900	1,555	1,255	1,078	901	1,250	2,633	2,156	1,320	1,075	2,876	3,353	2,920	3,397	3,191	3,668	70

d* Shaft diameter for belt-drive

FKL (B,P) 3	Max. motor	Max. weight [kg] excluding motor <180	M200–225	M250–280
090	225M	251	267	
100	225M	310	322	
112	280	463	477	485
125	280	591	606	617
140	280	718	727	740

Overview diagram

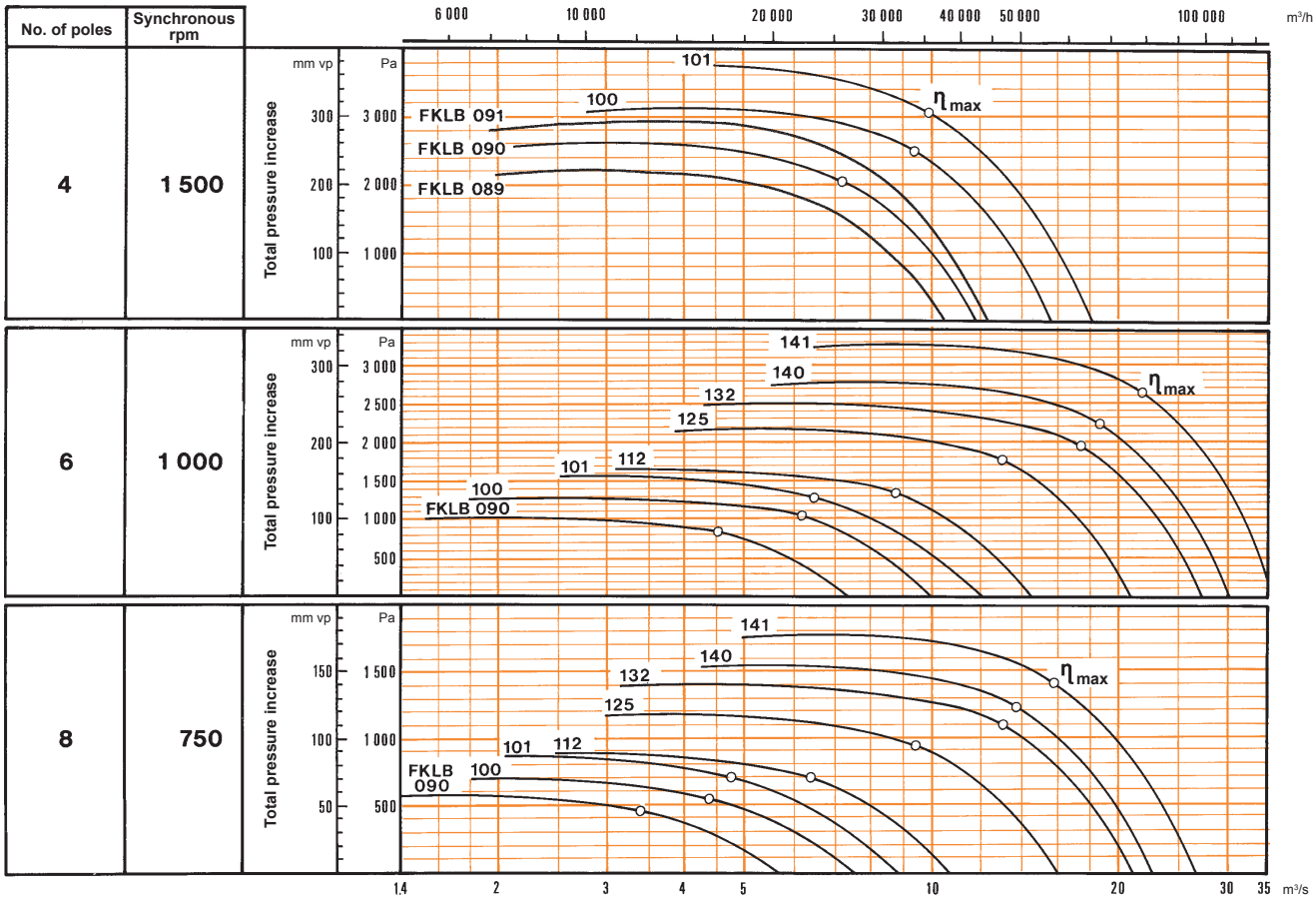

Motor data

4-pole/1,500 rpm			
FKLB 1	Motor	Power	Rotational speed
		[kW]	[rpm]
089	160L	15	1,460
090	180M	18.5	1,470
091	180L	22	1,475
100	200L	30	1,475
101	225S	37	1,475
112			
125			
132			
140			
141			

6-pole/1,000 rpm			
FKLB 1	Motor	Power	Rotational speed
		[kW]	[rpm]
089			
090	132M	5.5	945
091			
100	160M	7.5	970
101	160L	11	975
112	180L	15	965
125	225M	30	985
132	280S	45	985
140	280M	55	985
141	315S	75	985

8-pole/750 rpm			
FKLB 1	Motor	Power	Rotational speed
		[kW]	[rpm]
089			
090	132S	2.2	710
091			
100	160M	4	730
101	160M	5.5	730
112	160L	7.5	725
125	200L	15	725
132	225M	22	730
140	225M	22	730
141	250M	30	730

Capacity

The diagrams apply for air with a density of 1.2 kg/m³.

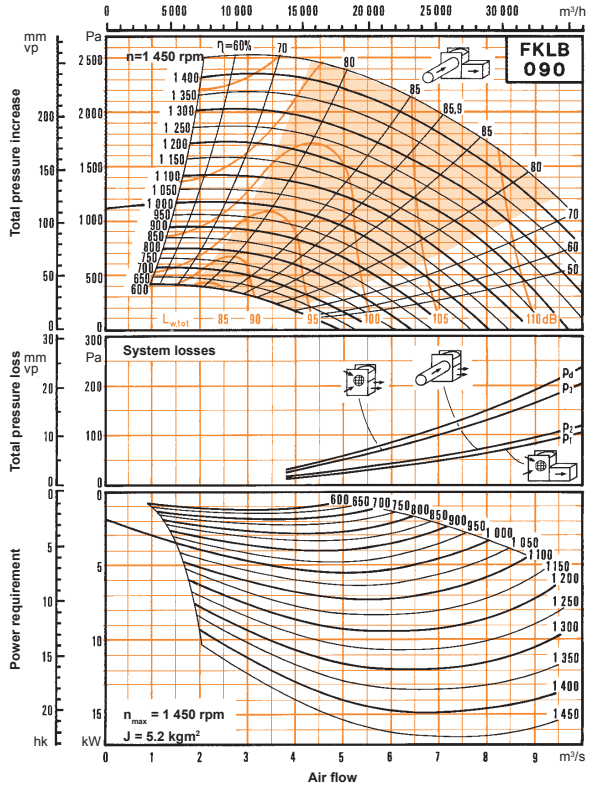

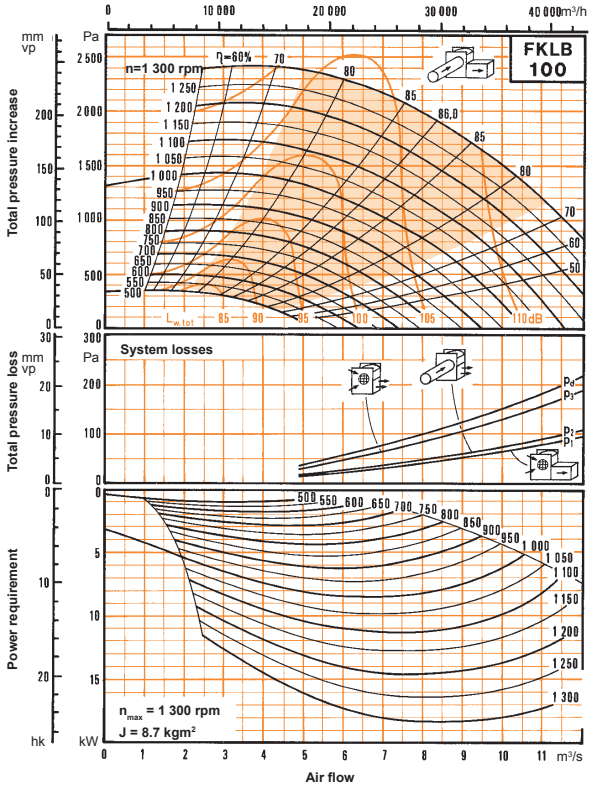

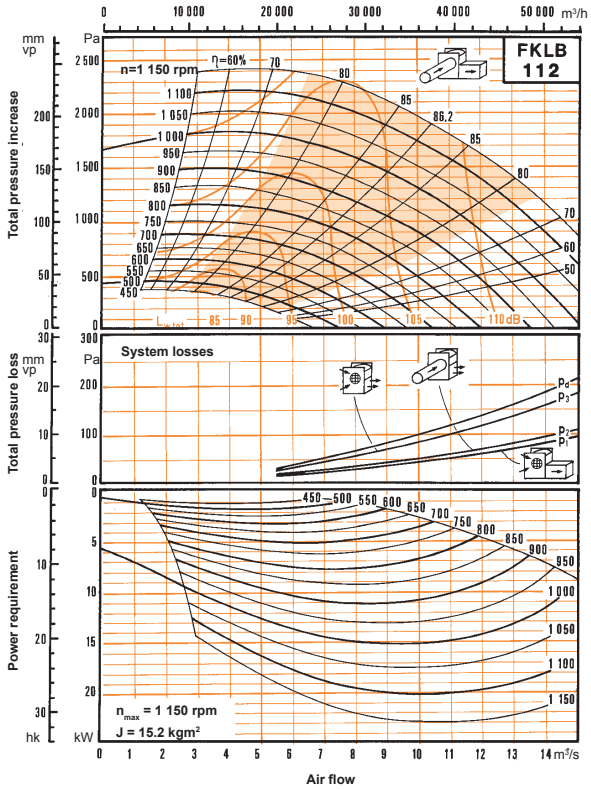

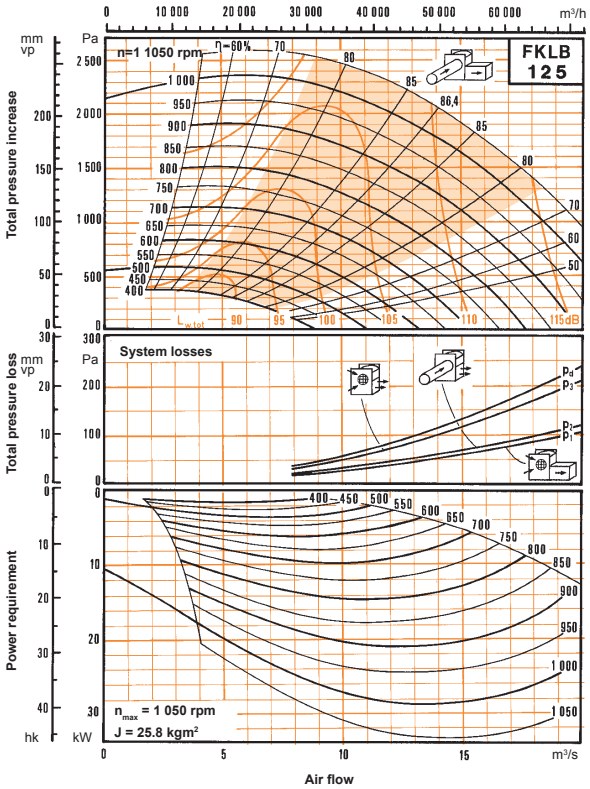

Capacity

The diagrams apply for air with a density of 1.2 kg/m³.

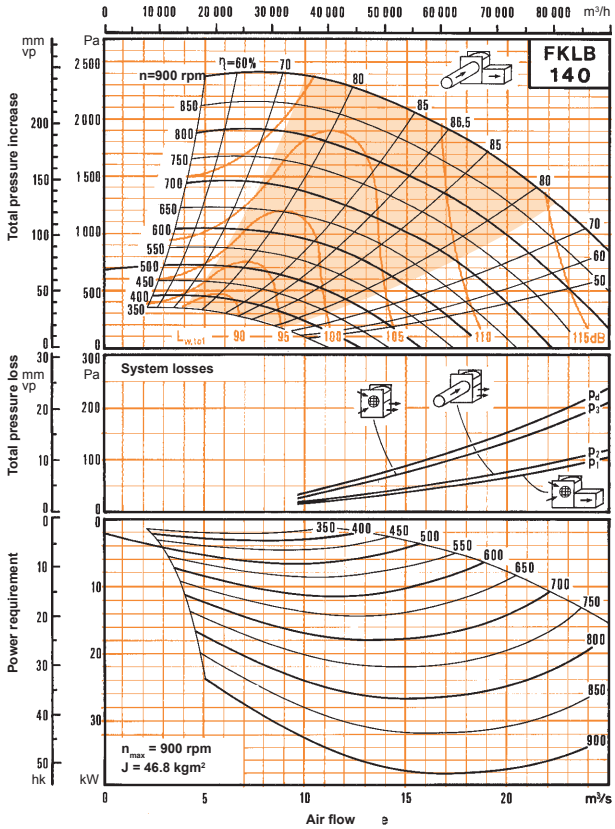

Audio data

Total acoustic power level to outlet duct $L_{W\,tot}$ can be read in each fan diagram. For dividing into different audio paths and octave bands, the following formula is used:

$$L_{W,\,ok} = L_{W\,tot} + K_{ok}$$

where K_{ok} is obtained from the following table:

Correction factor K_{ok} for different audio paths and octave bands

	Rotational speed range [rpm]								
Octave band No.		1	2	3	4	5	6	7	8
Mean frequency, (Hz)		63	125	250	500	1,000	2,000	4,000	8,000
Audio path to outlet duct	200-1,300	-6	-3	-4	-10	-18	-29	-36	-45
	1,301-2,600	-7	-8	-4	-5	-10	-15	-26	-40
	2,601-	-7	-9	-8	-4	-7	-11	-17	-28
Audio path to inlet duct, to the right of the line for highest efficiency	200-1,300 1,301-2,600 2,601-	-2	-5	-10	-16	-22	-28	-35	-43
Audio path to inlet duct, to left of the line for highest efficiency	200-1,300 1,301-2,600 2,601-	-7	-10	-14	-20	-26	-33	-40	-47
Audio path to surrounding at free-standing suction fan	200-1,300	-22	-10	-10	-13	-17	-22	-29	-36
	1,301-2,600	-32	-22	-15	-10	-11	-15	-22	-33
	2,601-	-37	-28	-20	-13	-10	-11	-16	-25
Audio path to surrounding at duct-connected fan	200-1,300	-24	-13	-13	-14	-17	-22	-29	-36
	1,301-2,600	-34	-25	-18	-11	-11	-15	-22	-33
	2,601-	-39	-31	-23	-14	-10	-11	-16	-25

Capacity

The diagrams apply for air with a density of 1.2 kg/m³.

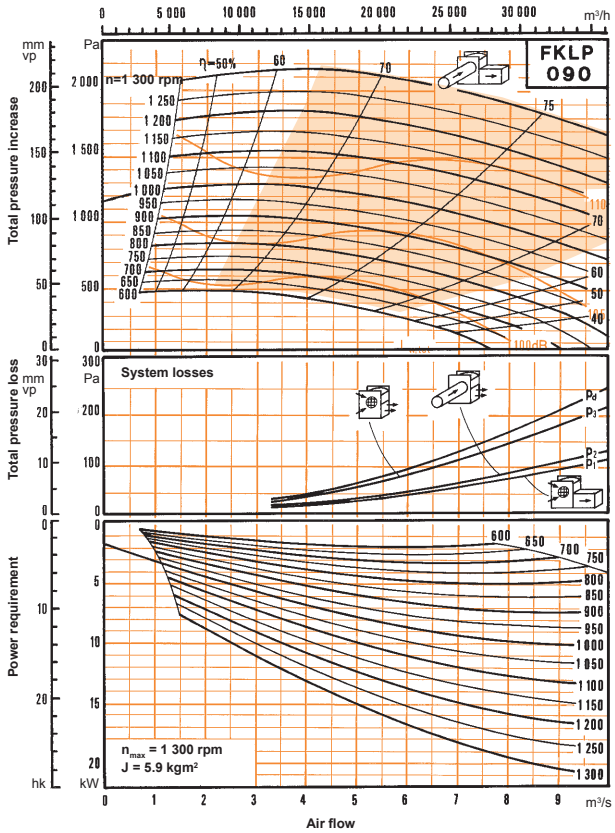

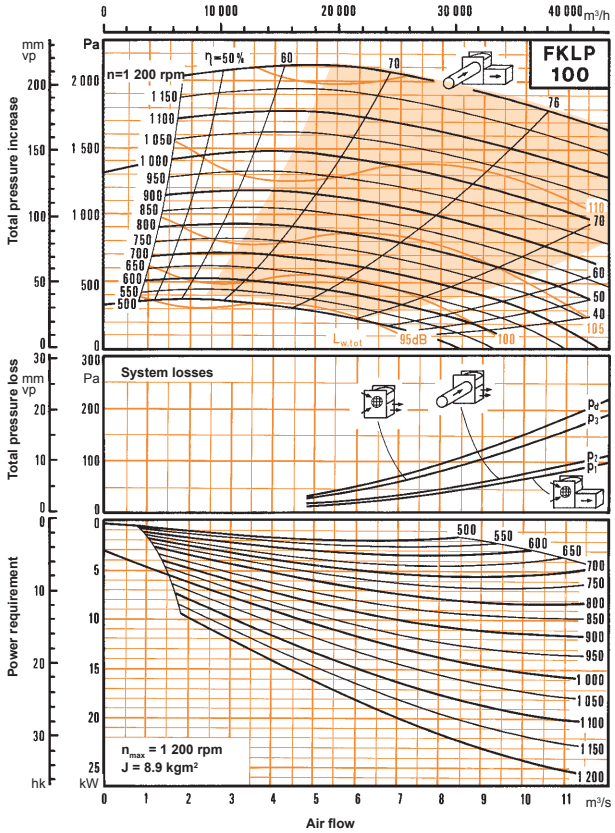

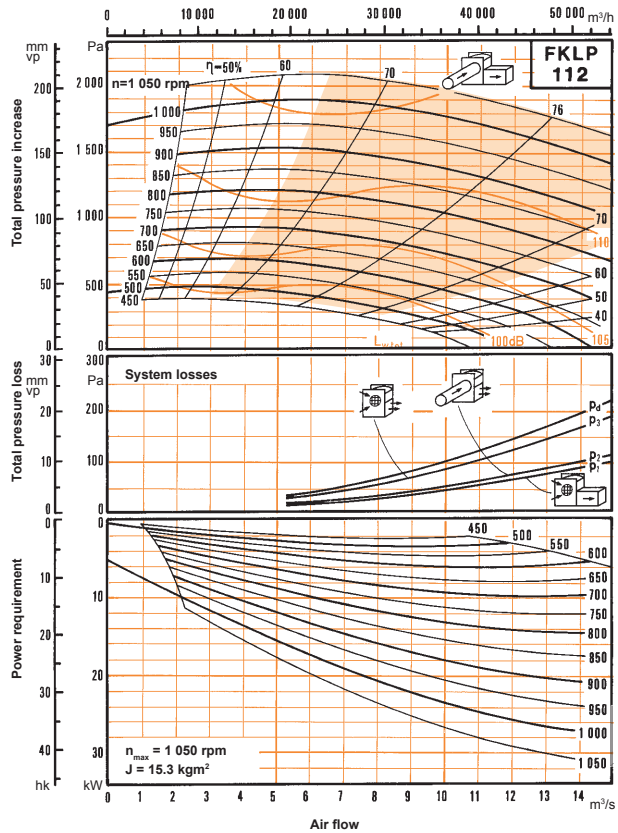

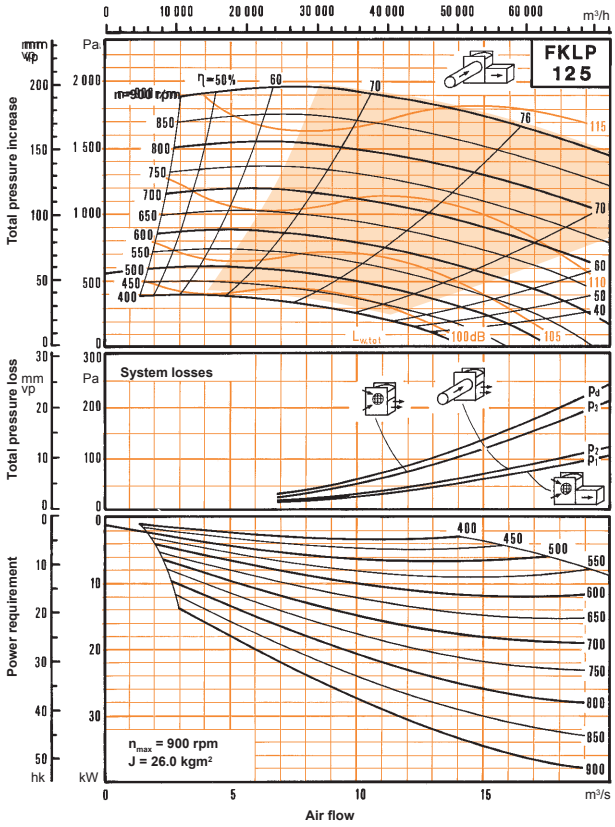

Capacity

The diagrams apply for air with a density of 1.2 kg/m³.

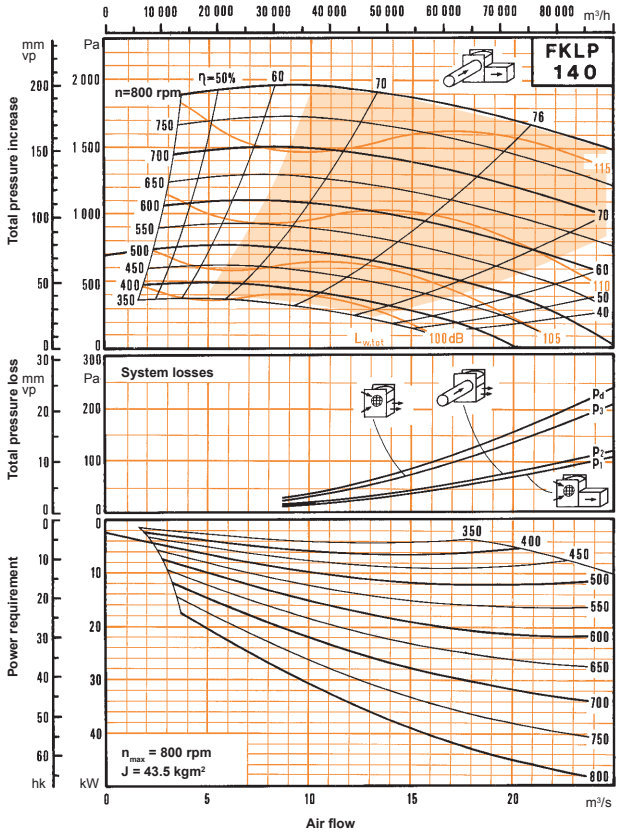

Audio data

Total acoustic power level to outlet duct $L_{W\,tot}$ can be read in each fan diagram. For dividing into different audio paths and octave bands, the following formula is used:

$$L_{W,\,ok} = L_{W\,tot} + K_{ok}$$

where K_{ok} is obtained from the following table:

Correction factor K_{ok} for different audio paths and octave bands

Octave band, No.	1	2	3	4	5	6	7	8
Mean frequency, [Hz]	63	125	250	500	1,000	2,000	4,000	8,000
Audio path to outlet duct	+1	-2	-28	-13	-20	-30	-36	-40
Audio path to inlet duct, to the right of the line for highest efficiency	+3	-4	-14	-19	-24	-27	-35	-43
Audio path to inlet duct, to left of the line for highest efficiency	-2	-9	-18	-23	-28	-32	-40	-47
Audio path to surrounding at free-standing fan	-17	-9	-14	-16	-19	-23	-29	-37
Audio path to surrounding at duct-connected fan	-19	-12	-17	-17	-20	-23	-29	-37