Axial fan LPMB

Model

Axial fan LPMB

The LPMB fan is suitable for comfort ventilation and industrial installations. There are fans for wall-mounting and for duct connection.

The fan motors are placed directly in the air flow. For this reason, the temperature of the transported air is limited to 40°C. The air must not contain aggressive or dangerously explosive components.

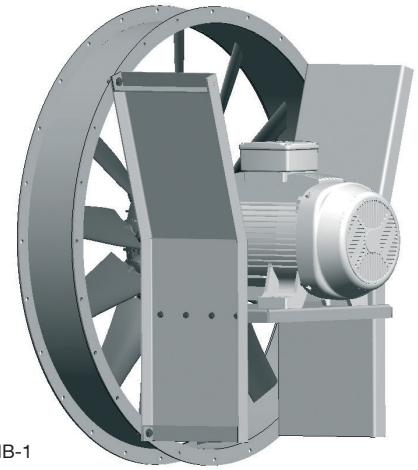

LPMB-1

Facts

Flow range: 1.5–41.5 m^3/s

Pressure range: 0–1,000 Pa

Max. gas temp.: 40°C

Type of impeller: Axial

Design

LPMB An1 Wall-mounting

The casing (short cylindrical) has a powerful, fully-welded design and is equipped with connection flanges at both ends. Normally supplied lacquered in environmental class C2.

LPMB An6 Duct connection

The casing (long cylindrical) has a powerful, fully-welded design and features connection flanges at both ends. Normally supplied lacquered in environmental class C2. The casing features an inspection cover and a cable inlet as standard.

Axial fan impeller

The wings of the axial fan impeller are made of plastic and its hub is of silumin. The standard impeller can work within the temperature range –40°C to +80°C.

LPMB-6

Optional accessories

No.	Designation	Item No.
1	Protective guard	GOCA1aaa
2	Sleeve coupling L = 100 flange	POAA1aaa
3	Flange inlet, painted	FODA1aaa1

Painting

No.	Designation	Item No.	Comment
1	Set-up cost painting LPM M2 (C2)	LPMZ1811	
2	Set-up cost painting LPM M3/Epoxy C4	LPMZ1812	
3	Radial fan painting Customer-specific Colour	LPMZ1aaa913	RAL colour code when ordering.

Axial fan LPMB – Specifications

Item No./Fan code =	LPMB	A	-	BBB	-	C
Design						
Wall-assembly		1				
Duct connection		6				
Fan size						
080				080		
090				090		
100				100		
112				112		
125				125		
140				140		
160				160		
Motor size						
132 = Ø38						1
160 = Ø42						2
180 = Ø48						3
200 = Ø55						4
225 = Ø60						5
250 = Ø65						6
280 = Ø75						7
315 = Ø80						8

The LPMB axial fan is equipped with an impeller and motor customised to every unique need. When requested, specify desired pressure and flow.